SEAT RECLINER BRACKETS

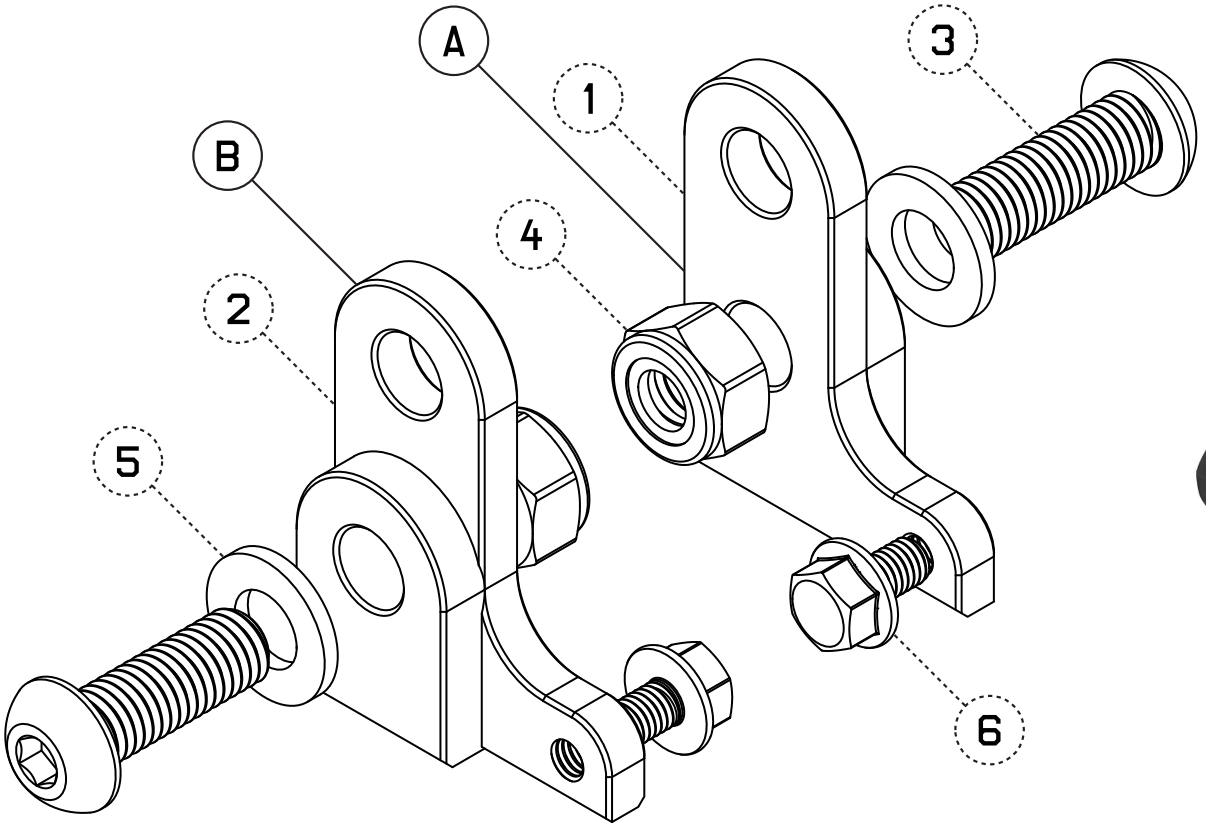

DRIVER/PASSENGER

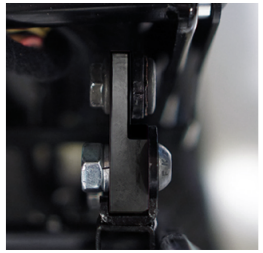

ITEM	PART NAME	QTY.	IN KIT
1	SEAT INNER BRACKET	1	YES
2	SEAT OUTER BRACKET	1	YES
3	M10 BUTTON HEAD BOLT	2	YES
4	M10 NYLON LOCKNUT	2	YES
5	M10 WASHER	2	YES
6	M6 FLANGED HEX SCREW	2	YES
7	BLUE THREAD LOCKER	1	YES

TOOLS NEEDED

- 3/8” ratchet
- E12 socket (3/8" drive)
- 6mm Allen
- 8mm Allen
- 10mm wrench
- 16mm wrench
- 17mm wrench

SEAT RECLINER BRACKETS

READ BEFORE INSTALLATION

The end user assumes full responsibility for the application of any Asphalt Killerz product. Asphalt Killerz disclaims any liability for warranty voids or damages that may arise from the use of these products. Prior to drilling, it is essential to thoroughly examine the area, as the placement of wiring harnesses and other components can vary.

INSTALLATION INSTRUCTIONS

- **Disconnect the Battery:** To access the battery, remove the panel located in the trunk. Use a 10mm wrench to disconnect the negative (-) terminal.
- **Remove Seat Bolts:** To remove all four seat bolts, employ an E12 socket. Slide the seat all the way back to reach bolts 1 and 2.
  Then, move the seat fully forward to access bolts 3 and 4.
- **Unbolt Seatbelt:** To detach the seat belt from the seat, start by removing the plastic cap, then use a 17mm wrench.
- **Disconnect Yellow Plug:** To disconnect the yellow plug beneath the seat, lift the black tab to unlock it.
  Place a towel over the side sill to prevent scratches, and then carefully remove the seat.
- **Unbolt Pivoting Arm:** Use a 16mm wrench and an 8mm Allen key to remove the bolt from the pivoting arm on each side.
- **Install Seat Recliner Brackets:**
  - Position the recliner brackets as shown. Begin by inserting the provided M6 bolt into the bracket through the small opening in the seat rail, ensuring it is not tightened yet. On the right side, detach a wire harness clip, which can be left loose or secured. Next, insert the supplied M10 bolt through the seat rail and the bracket, securing it with an M10 washer and a Nyloc nut, but do not tighten it at this stage. Once both bolts are in place, tighten the M6 bolt to 72 lbs (or hand tight), followed by the M10 bolt to 30 ft-lbs.
  - Attach the pivoting arm to the riser, ensuring the shoulder section of the bolt is positioned on the plastic bushing. When correctly installed, the nut will be on the inside of the seat, opposite its original position. Apply medium-strength thread locker to both the nut and bolt, and tighten to a torque of 30 ft-lbs.
- **Reinstall Seat:** To reinstall the seat, follow the instructions in reverse order.